Catalog No. C10102B

DADCO®

Nitrogen Gas Springs

UT Series

- **Up to 95 kN of force on contact**
- **UltraPak® cartridge for long life**
- **Operates self-contained or linked**

PED
2014/68/EU
COMPLIANT

Introduction

DADCO®

The global leader in nitrogen gas spring technology

DADCO produces top quality products at competitive prices and provides a superior level of customer service. Founded in 1958, DADCO is the highest volume producer of gas springs for press tools. DADCO's products are widely approved and used in global operations for many industries including metal stamping, automotive and plastic injection molding.

UT Series

This series consists of five models and provides force up to 95 kN on contact. Each model comes standard with a G 1/8 charging port for consistent link capability using the Zip (CNOMO) Fittings and 90.705 hose. Optionally, the UT.1000 and UT.2600 models are available with a pressure indicator installed for quick monitoring at a glance during operation.

Model	Diameter	Maximum Force on Contact
UT.1000	50 mm	9.24 kN
UT.2600	75 mm	23.86 kN
UT.4600	95 mm	42.41 kN
UT.6600	120 mm	66.27 kN
UT.9600	150 mm	95.43 kN

High Quality Construction

To ensure their exceptionally long service life, DADCO's UT Series Gas Springs have high quality construction features. UT gas spring models are built with a one-piece piston rod and utilize a double lip rod seal for excellent load capacity and resistance to wear.

Adjustable Force

For convenience, self-contained cylinders usually are delivered pre-charged to the desired force and ready to install. If force adjustment is ever needed, a filling/draining port is located in the cylinder for safe, easy access.

UltraPak® Technology

The UT Series incorporates superior gas spring technology into DADCO's **UltraPak®** cartridge. The **UltraPak®** employs advanced materials to reduce the rod cartridge profile while increasing performance. The **UltraPak®** is comprised of a rod wiper, rod seal and guide arranged to extend life, retain lubrication, exclude contaminants, and provide excellent wear characteristics. When coupled with DADCO's superior finished piston rod, the **UltraPak®** is the ultimate sealing system in compact height gas springs.

Numerous Piping Options

Many customers have recognized the benefits of piping gas springs to monitor, control, and adjust force from outside the die. DADCO offers a wide selection of hoses, fittings, control panels and equipment to simplify the piping process. For additional information request the Nitrogen Gas Spring Linked Components Catalog.

Customer Satisfaction

DADCO's motto is *"Whatever It Takes To Satisfy Our Customers."* DADCO will assist in any way possible to ensure that customers are completely satisfied. DADCO's salespeople and distributors are solution-oriented, product-knowledgeable, and eager to assist customers. DADCO's engineers are available to help customers with specific applications.

Rapid Delivery

DADCO's modern 11,600 m^2 main production facility as well as satellite facilities permit the fastest deliveries in the industry. Products are available both directly and through a network of trained distributors providing worldwide support.

Warranty

DADCO warrants its UT Series Nitrogen Gas Springs to be free from defects in workmanship or materials for a period of one year from date of manufacture.

CAD Templates On-line

DADCO's entire product line is available on-line in solid models and 2D CAD formats. For more information, visit our website, www.dadco.net, or contact DADCO.

1.734.207.1100 • fax 1.734.207.2222 • www.dadco.net

Installation Examples

DADCO offers a variety of mount options to meet specific customer applications. Installation and fastening of the gas springs should take into consideration load support, fastener selection and torque values. For additional information on installation requirements see page 16. Cylinder and mount dimensions are shown on pages 4-13.

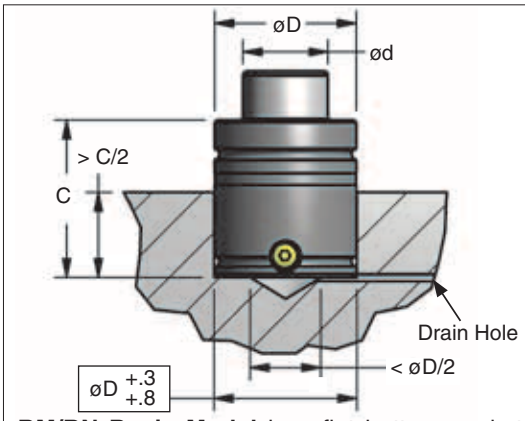

RM/RN Basic Model in a flat bottom pocket. The pocket must be bored with a flat bottom, or a spacer must be used to create a flat surface.

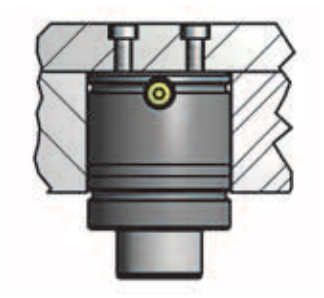

RM/RN Basic Model mounted inverted requires back-up to support the full load. Retain inverted cylinders tight in the pocket with the appropriate length cap screw to eliminate movement.

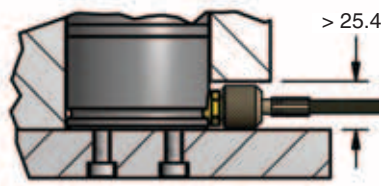

RM/RN Basic Model mounted to a plate. Linked cylinders require clearance for the hose and fittings.

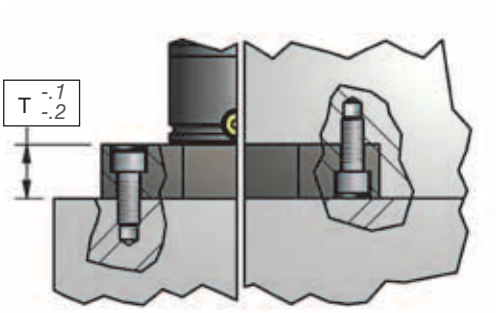

B43-B48 mounts must installed onto a flat surface. When mounted inverted, back-up is required to support the full load.

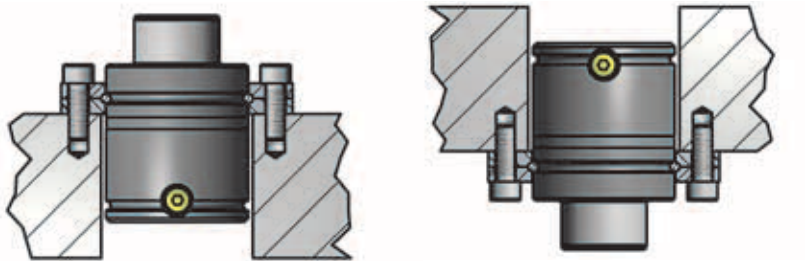

B21/B25/B325 mounts must be fastened to the top groove only. The wire ring supplied with mounts supports the full load.

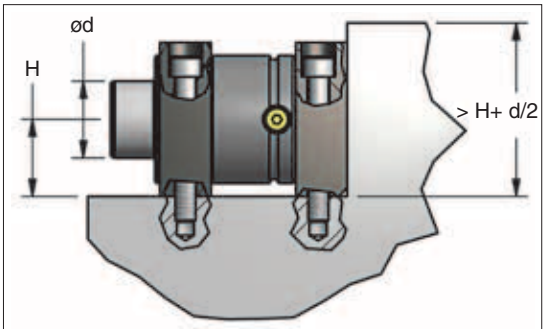

B40 mounts require back-up to support the load.

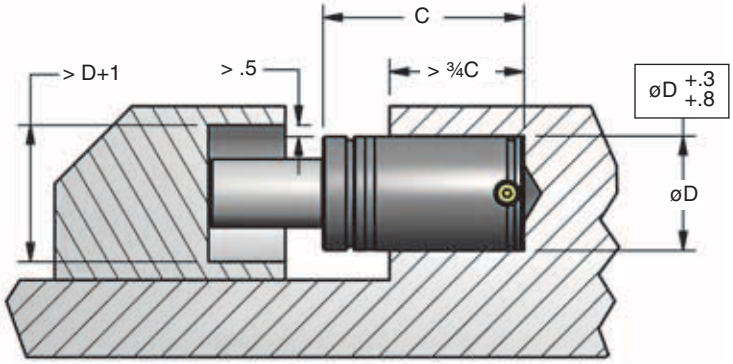

RM/RN Basic Model mounted in a horizontal pocket. Allow clearance in the rod pocket to avoid contacting the body of the cylinder during operation. Allow the rod to locate freely.

DADCO offers customized Sectional Mounting Systems, which are fabricated to customer specifications, leak tested and shipped ready to install. The drawing below shows six UT.2600 gas springs linked using DADCO's *MINIFLEX*® Y-705 hose, fittings and a Mini Control Panel.

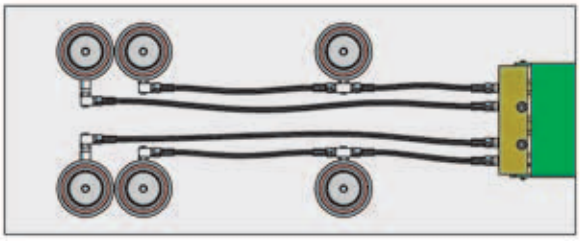

UT.1000 - 9.2 kN / 1.0 ton

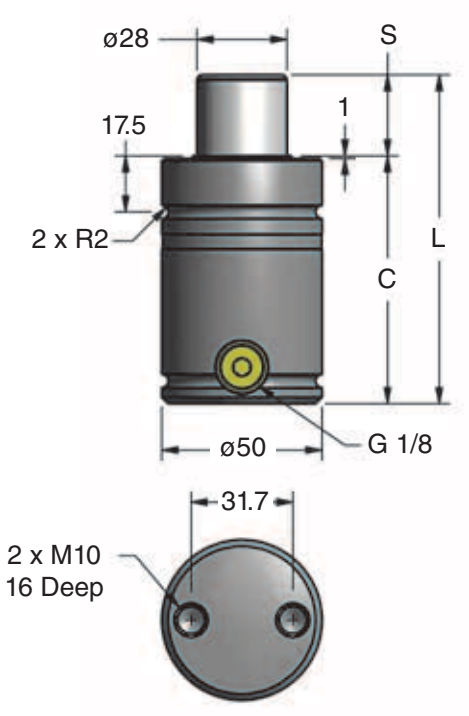

RM - Radius Groove

Force Graph

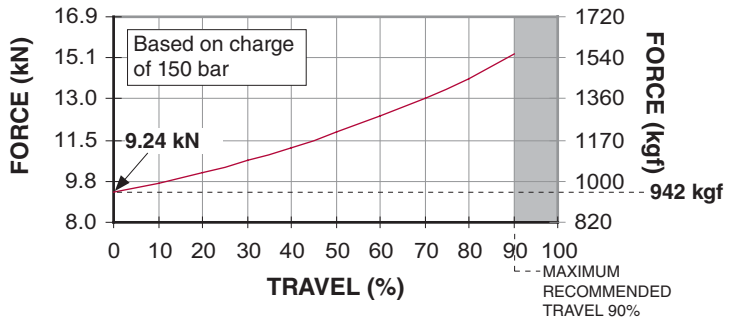

Part No.	S mm	On-Contact Force kN (kgf)	Max Force* kN (kgf)	C	L ±0.25	Pressure Increase* %	Weight kg
UT.1000.013	12.5	9.24 (942)	15.29 (1559)	64.5	77.0	65	0.79
UT.1000.016	16.0			68.0	84.0		0.82
UT.1000.019	19.0			71.0	90.0		0.85
• UT.1000.025	25.0			77.0	102.0		0.91
UT.1000.032	32.0			84.0	116.0		0.97
UT.1000.038	37.5			89.5	127.0		1.03
• UT.1000.050	50.0			102.0	152.0		1.14
UT.1000.063	62.5			114.5	177.0		1.26
• UT.1000.075	75.0			127.0	202.0		1.38
UT.1000.080	80.0			132.0	212.0		1.42
• UT.1000.100	100.0			152.0	252.0		1.61
• UT.1000.125	125.0			177.0	302.0		1.84

• *Preferred Sizes*

*Based on maximum recommended travel, 90% stroke

On-Contact Force

bar	MPa	kN	kgf
150	15.0	9.24	942
125	12.5	7.70	785
100	10.0	6.16	628
75	7.5	4.62	471
50	5.0	3.08	314
25	2.5	1.54	157
20	2.0	1.23	126

1.734.207.1100 • fax 1.734.207.2222 • www.dadco.net
DADCO®

UT.1000 - 9.2 kN / 1.0 ton

Mount Options

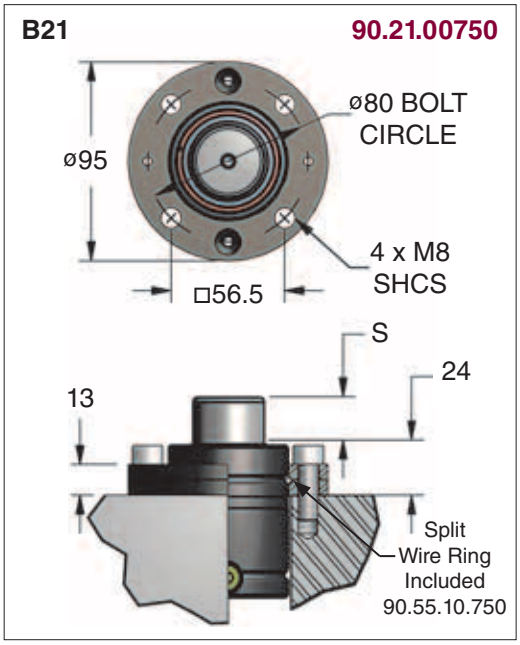

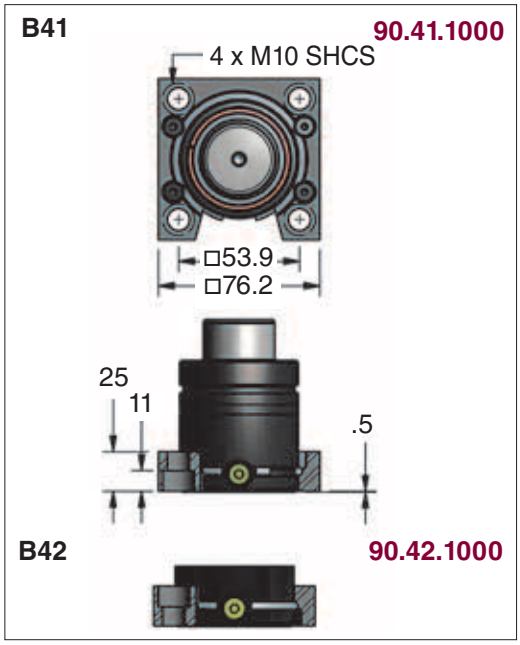

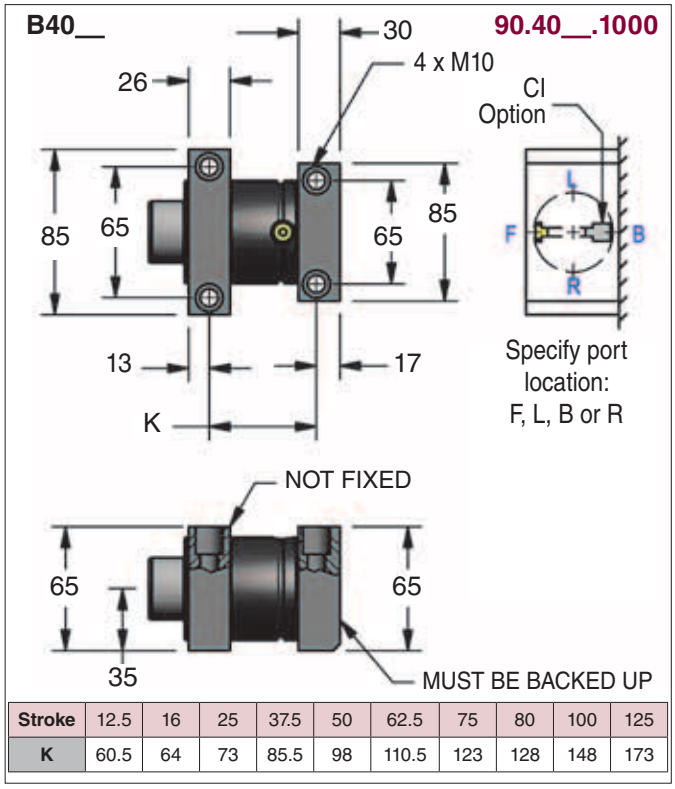

Stroke	12.5	16	25	37.5	50	62.5	75	80	100	125
K	60.5	64	73	85.5	98	110.5	123	128	148	173

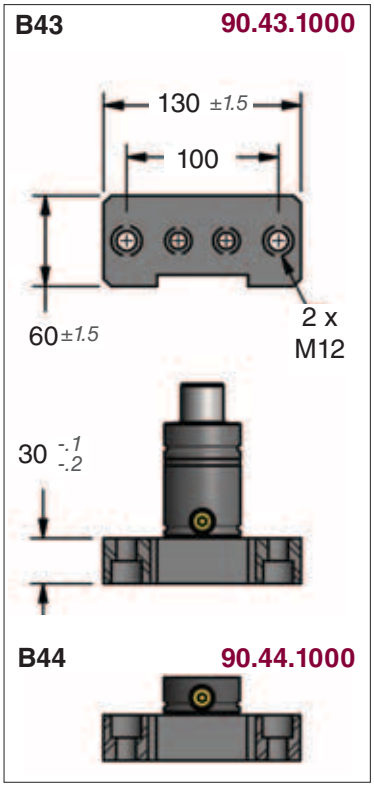

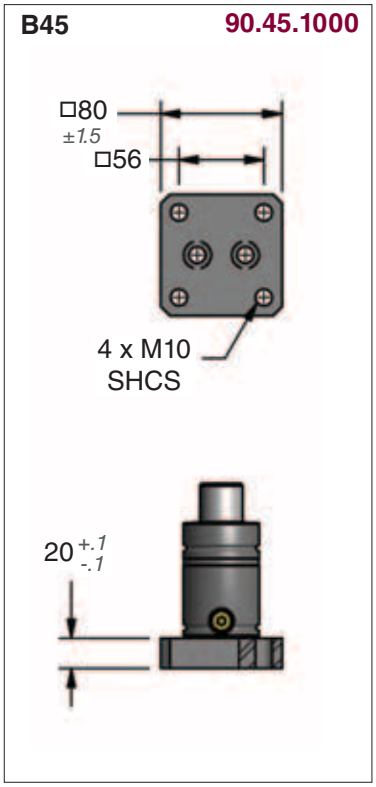

Ordering Example:

Model	.	Stroke	.	Mount	.	Operating System	.	Charging Pressure (bar)
UT.1000	.	025	.	B21	.	C	.	150
Part Number				RM: Radius Groove		C: Self-contained FB: Open Flow Fitting (90.805.115) CI__: Self-contained with Indicator		15~150 bar (1.5~15 MPa) When not specified, default is 150 bar (15 MPa).

UT.2600 - 24 kN / 2.6 ton

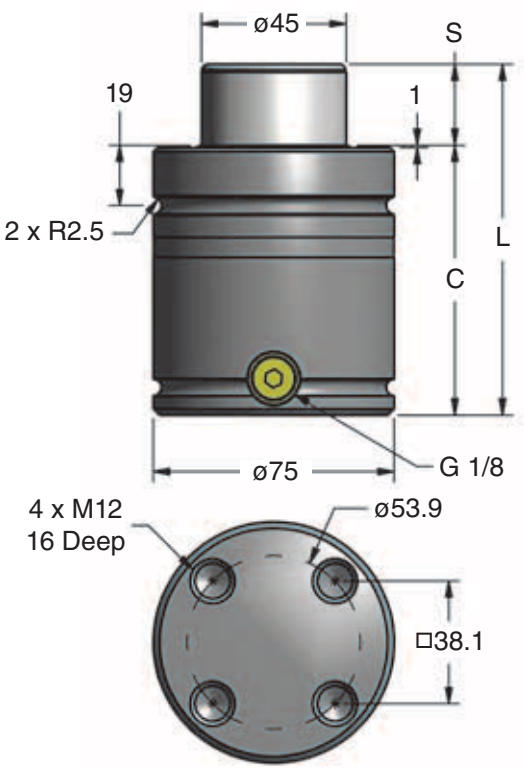

RN - Radius Groove

Force Graph

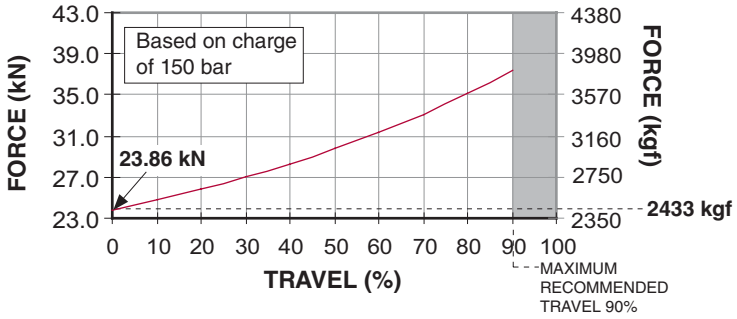

Part No.	S mm	On-Contact Force kN (kgf)	Max Force* kN (kgf)	C	L ±0.25	Pressure Increase* %	Weight kg
UT.2600.016	16.0	23.86 (2433)	37.52 (3826)	75.0	91.0	57	2.01
UT.2600.019	19.0			78.0	97.0		2.06
• UT.2600.025	25.0			84.0	109.0		2.16
UT.2600.032	32.0			91.0	123.0		2.28
UT.2600.038	37.5			96.5	134.0		2.37
• UT.2600.050	50.0			109.0	159.0		2.58
UT.2600.063	62.5			121.5	184.0		2.79
• UT.2600.075	75.0			134.0	209.0		3.01
UT.2600.080	80.0			139.0	219.0		3.09
• UT.2600.100	100.0			159.0	259.0		3.43
• UT.2600.125	125.0			184.0	309.0		3.85

• *Preferred Sizes*

*Based on maximum recommended travel, 90% stroke

On-Contact Force

bar	MPa	kN	kgf
150	15.0	23.86	2433
125	12.5	19.88	2027
100	10.0	15.90	1622
75	7.5	11.93	1216
50	5.0	7.95	811
25	2.5	3.98	405
20	2.0	3.18	324

1.734.207.1100 • fax 1.734.207.2222 • www.dadco.net
DADCO

UT.2600 - 24 kN / 2.6 ton

Mount Options

B21 90.21.01500

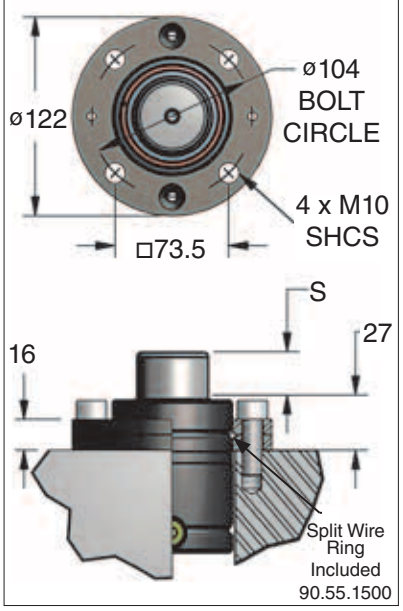

B325 90.325.2600

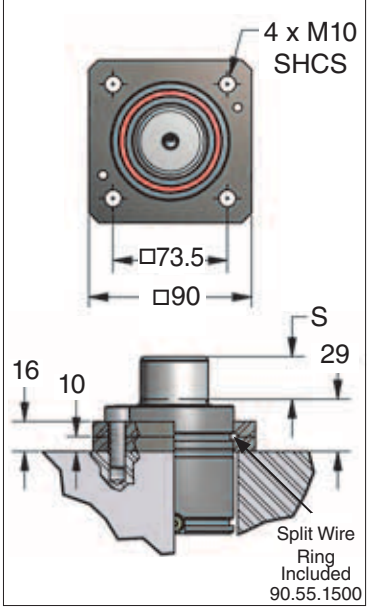

B41 90.41.2600

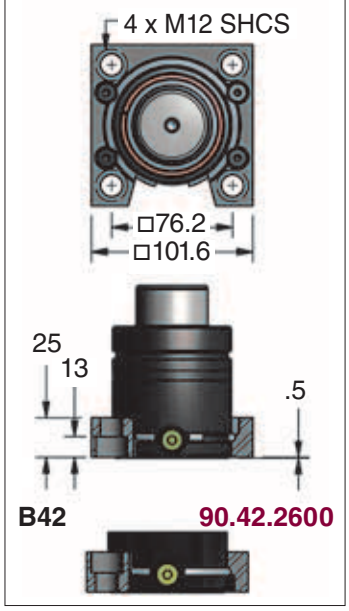

B42 90.42.2600

B45 90.45.2600

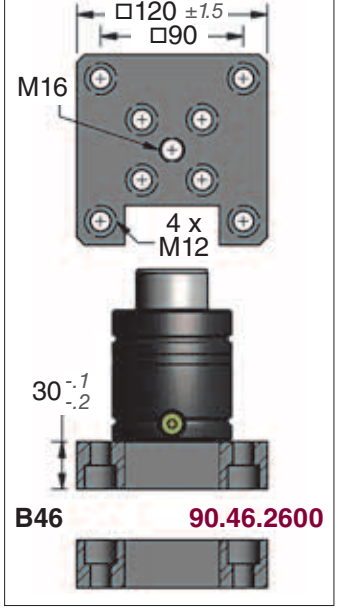

B46 90.46.2600

B40__ 90.40__.2600

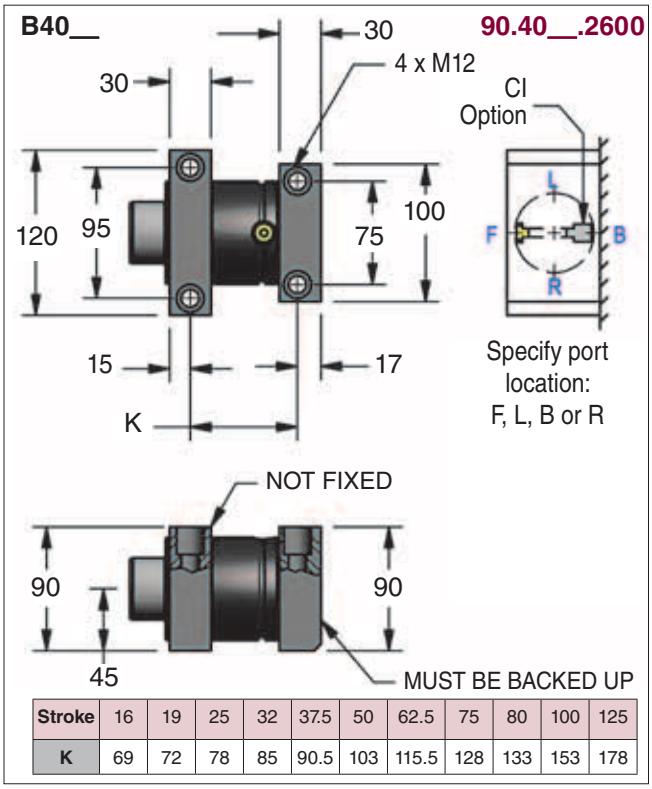

Stroke	16	19	25	32	37.5	50	62.5	75	80	100	125
K	69	72	78	85	90.5	103	115.5	128	133	153	178

B43 90.43.2600

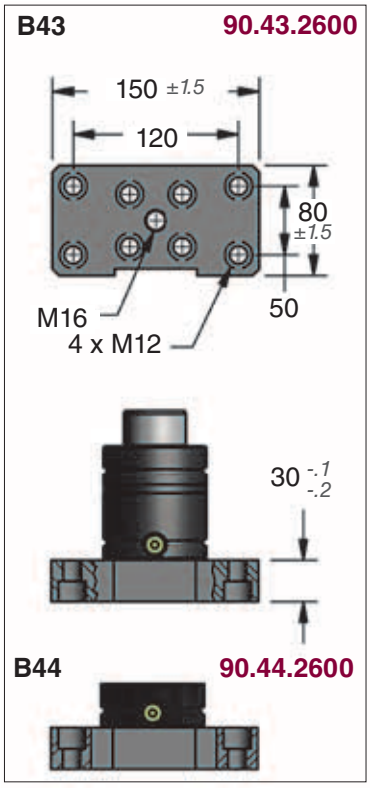

B44 90.44.2600

B47 90.47.2600

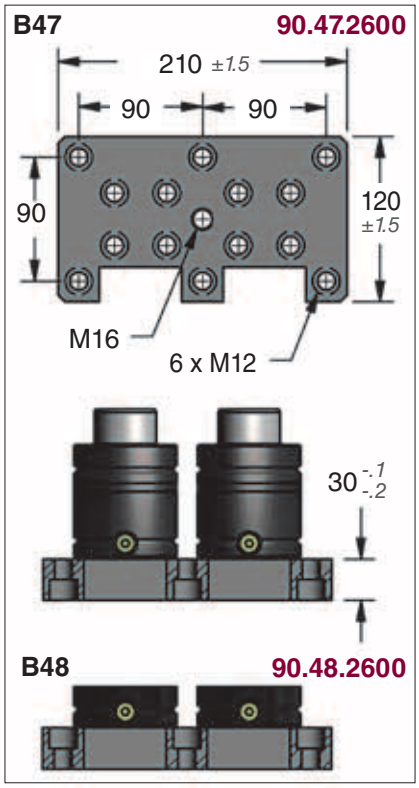

B48 90.48.2600

Ordering Example:

Model		Stroke		Mount		Operating System		Charging Pressure (bar)
UT.2600	.	025	.	B21	.	C	.	150
Part Number				RN: Radius Groove		C: Self-contained FB: Open Flow Fitting (90.805.115) CI__: Self-contained with Indicator		15~150 bar (1.5~15 MPa) When not specified, default is 150 bar (15 MPa).

UT.4600 - 42 kN / 4.3 ton

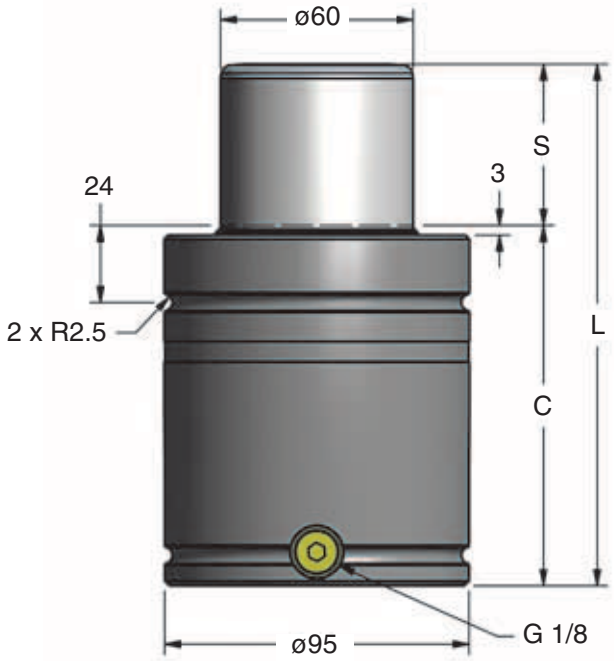

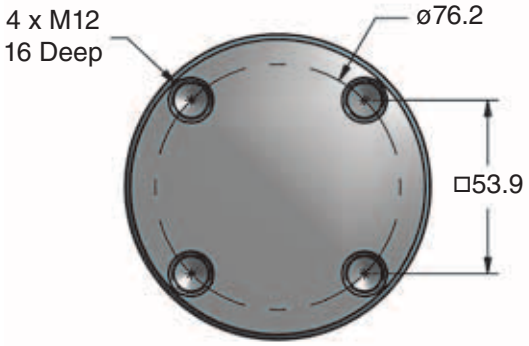

RM - Radius Groove

Force Graph

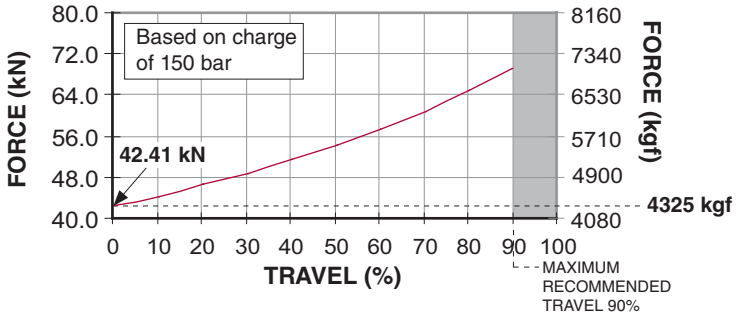

Part No.	S mm	On-Contact Force kN (kgf)	Max Force* kN (kgf)	C	L ±0.25	Pressure Increase* %	Weight kg
UT.4600.016	16.0	42.41 (4325)	69.34 (7070)	78.0	94.0	63	3.26
UT.4600.019	19.0			81.0	100.0		3.35
• UT.4600.025	25.0			87.0	112.0		3.52
UT.4600.032	32.0			94.0	126.0		3.73
UT.4600.038	37.5			99.5	137.0		3.89
• UT.4600.050	50.0			112.0	162.0		4.25
UT.4600.063	62.5			124.5	187.0		4.62
• UT.4600.075	75.0			137.0	212.0		4.98
UT.4600.080	80.0			142.0	222.0		5.13
• UT.4600.100	100.0			162.0	262.0		5.71
• UT.4600.125	125.0			187.0	312.0		6.44

• *Preferred Sizes*

*Based on maximum recommended travel, 90% stroke

On-Contact Force

bar	MPa	kN	kgf
150	15.0	42.41	4325
125	12.5	35.34	3604
100	10.0	28.27	2883
75	7.5	21.21	2162
50	5.0	14.14	1442
25	2.5	7.07	721
20	2.0	5.65	577

1.734.207.1100 • fax 1.734.207.2222 • www.dadco.net
DADCO

UT.4600 - 42 kN / 4.3 ton

Mount Options

B21 90.21.03000

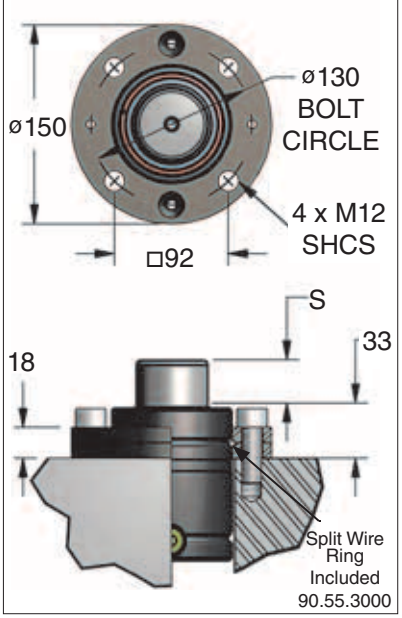

B25 90.25.03000

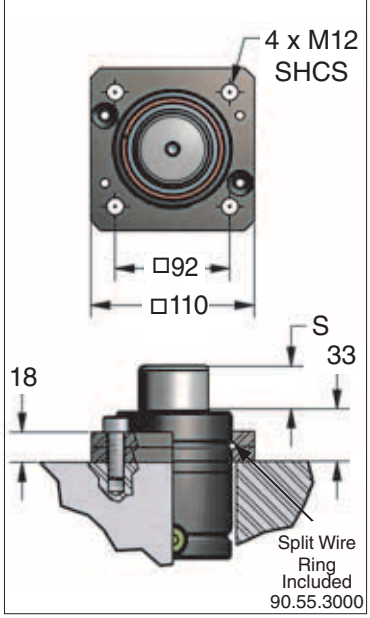

B41 90.41.4600

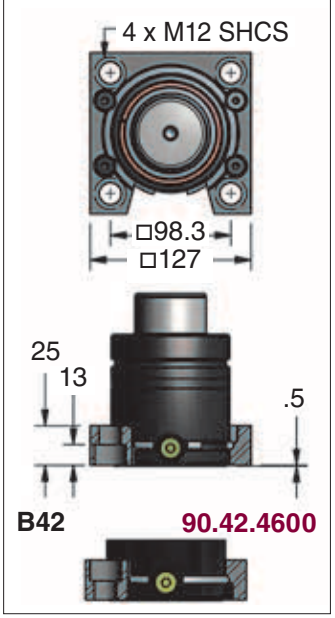

B42 90.42.4600

B45 90.45.4600

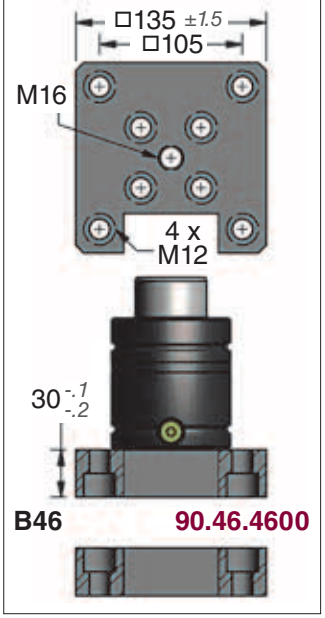

B46 90.46.4600

B43 90.43.4600

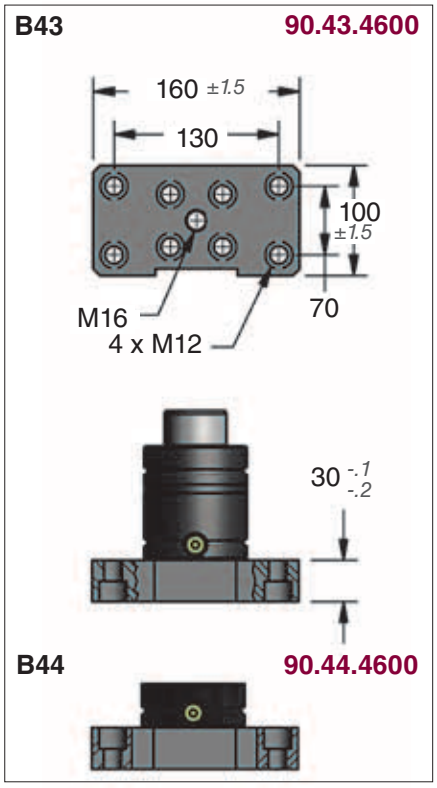

B44 90.44.4600

B47 90.47.4600

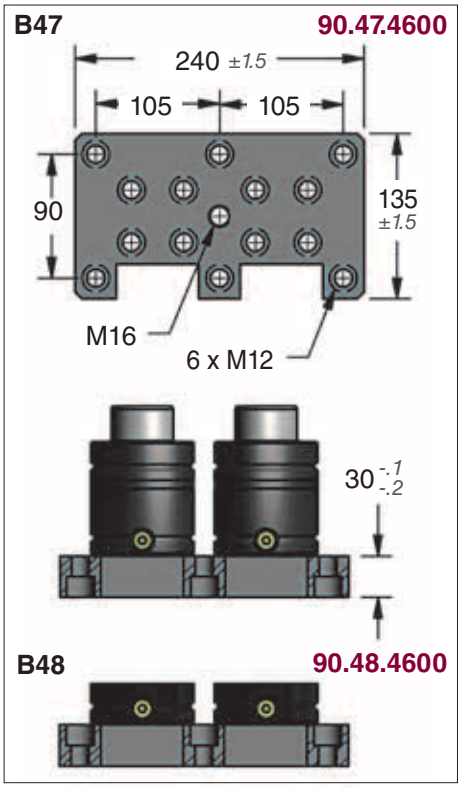

B48 90.48.4600

Ordering Example:

Model		Stroke		Mount		Operating System		Charging Pressure (bar)
UT.4600	.	025	.	B21	.	C	.	150
Part Number				RM: Radius Groove		C: Self-contained FB: Open Flow Fitting (90.805.115)		15~150 bar (1.5~15 MPa) When not specified, default is 150 bar (15 MPa).

UT.6600 - 66 kN / 7.4 ton

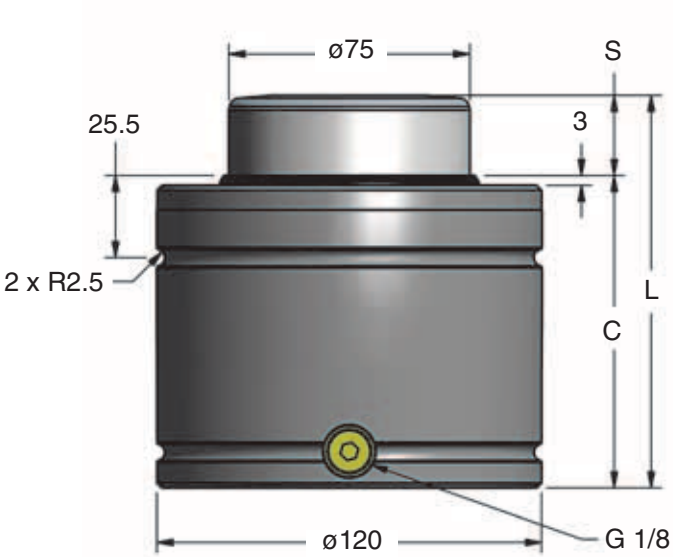

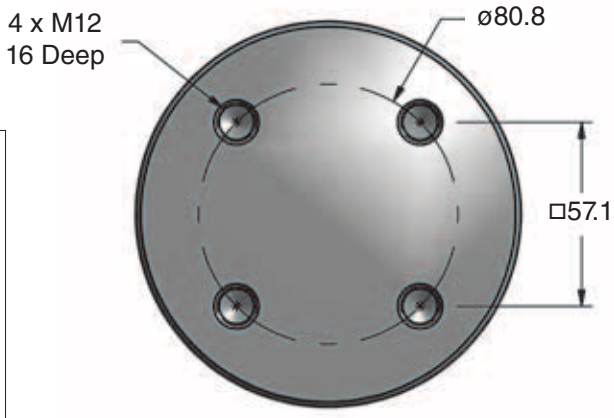

RM - Radius Groove

Force Graph

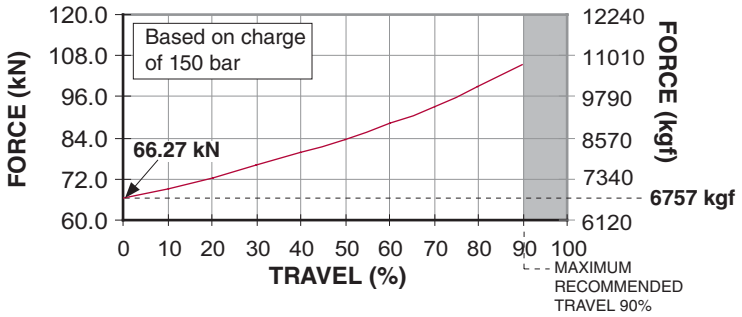

Part No.	S mm	On-Contact Force kN (kgf)	Max Force* kN (kgf)	C	L ±0.25	Pressure Increase* %	Weight kg
UT.6600.016	16.0	66.27 (6757)	104.14 (10619)	88.0	104.0	57	6.00
UT.6600.019	19.0			91.0	110.0		6.14
• UT.6600.025	25.0			97.0	122.0		6.41
UT.6600.032	32.0			104.0	136.0		6.73
UT.6600.038	37.5			109.5	147.0		6.98
• UT.6600.050	50.0			122.0	172.0		7.56
UT.6600.063	62.5			134.5	197.0		8.13
• UT.6600.075	75.0			147.0	222.0		8.70
UT.6600.080	80.0			152.0	232.0		8.93
• UT.6600.100	100.0			172.0	272.0		9.84
• UT.6600.125	125.0			197.0	322.0		10.99

• *Preferred Sizes*

*Based on maximum recommended travel, 90% stroke

On-Contact Force

bar	MPa	kN	kgf
150	15.0	66.27	6757
125	12.5	55.22	5631
100	10.0	44.18	4505
75	7.5	33.13	3379
50	5.0	22.09	2252
25	2.5	11.04	1126
20	2.0	8.84	901

1.734.207.1100 • fax 1.734.207.2222 • www.dadco.net
DADCO

UT.6600 - 66 kN / 7.4 ton

Mount Options

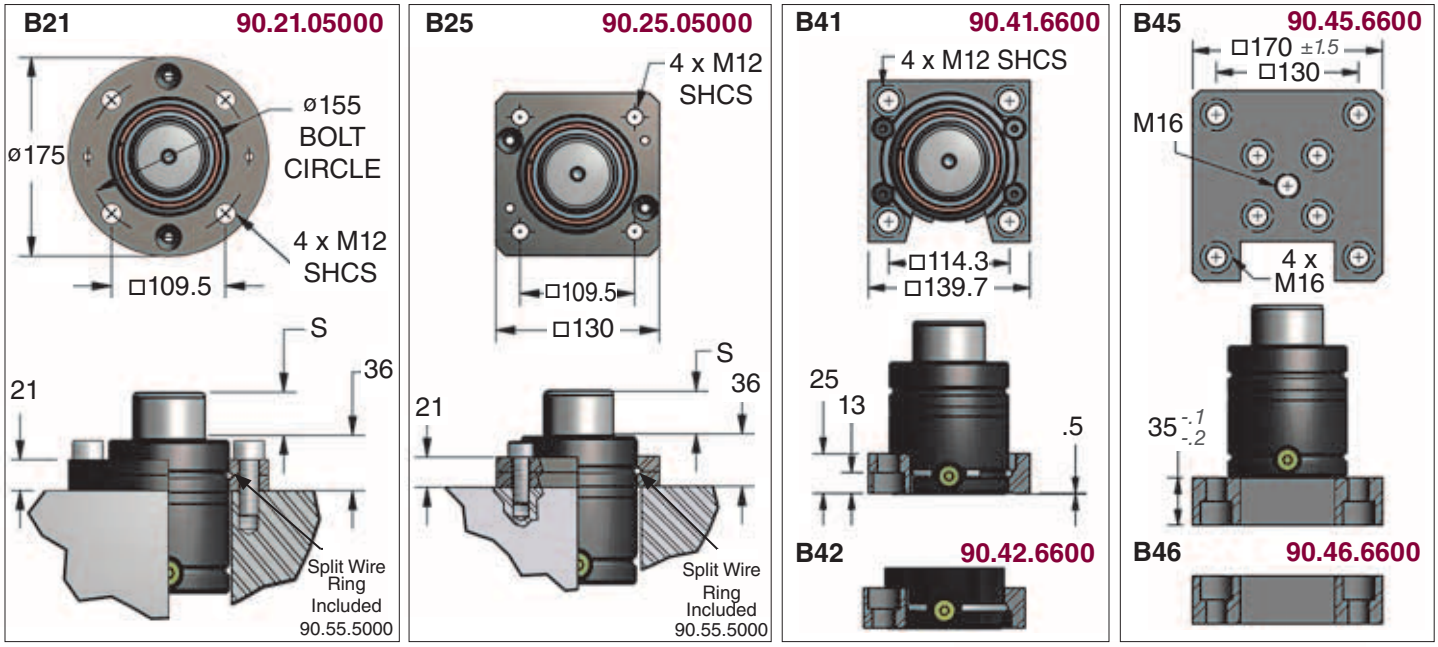

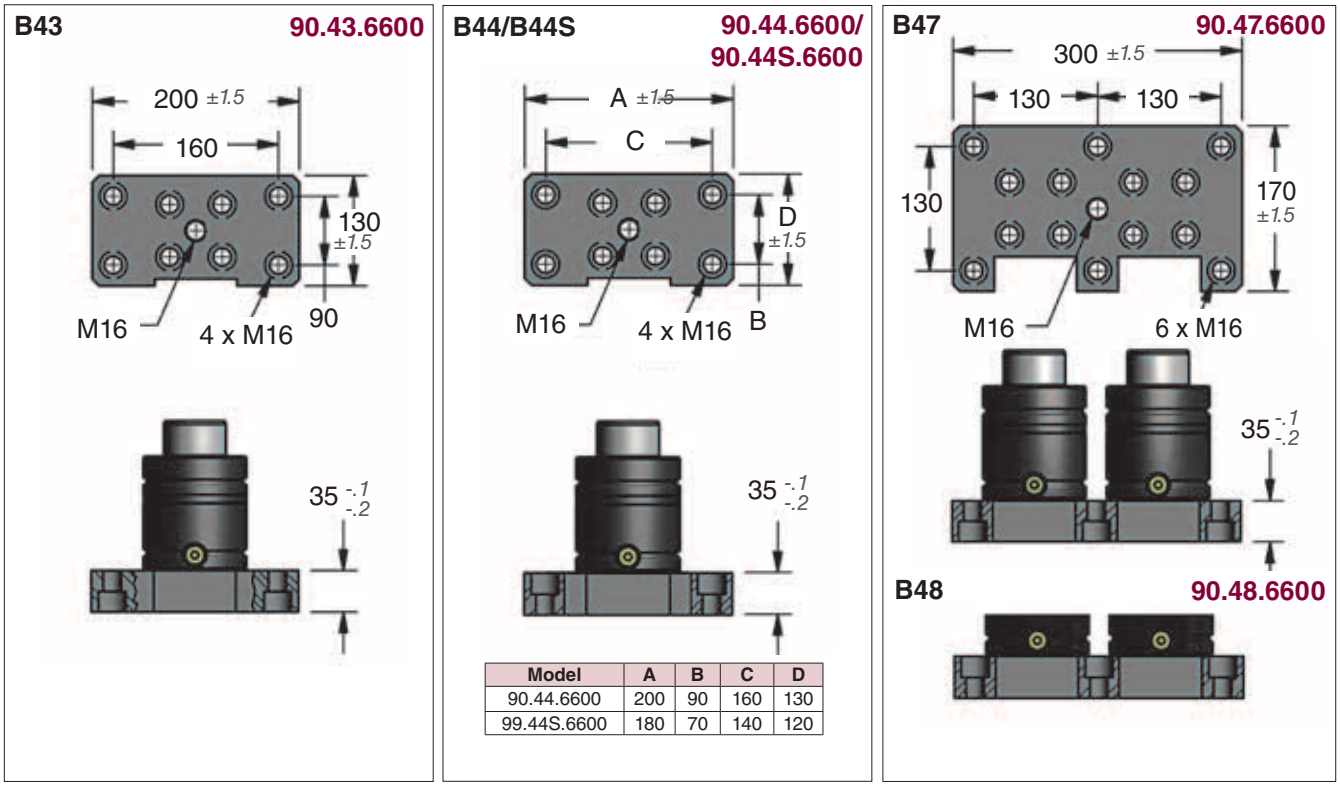

Model	A	B	C	D
90.44.6600	200	90	160	130
99.44S.6600	180	70	140	120

Ordering Example:

Model		Stroke		Mount		Operating System		Charging Pressure (bar)
UT.6600	.	025	.	B21	.	C	.	150
Part Number				RM: Radius Groove		C: Self-contained FB: Open Flow Fitting (90.805.115)		15~150 bar (1.5~15 MPa) When not specified, default is 150 bar (15 MPa).

UT.9600 - 95 kN / 10.7 ton

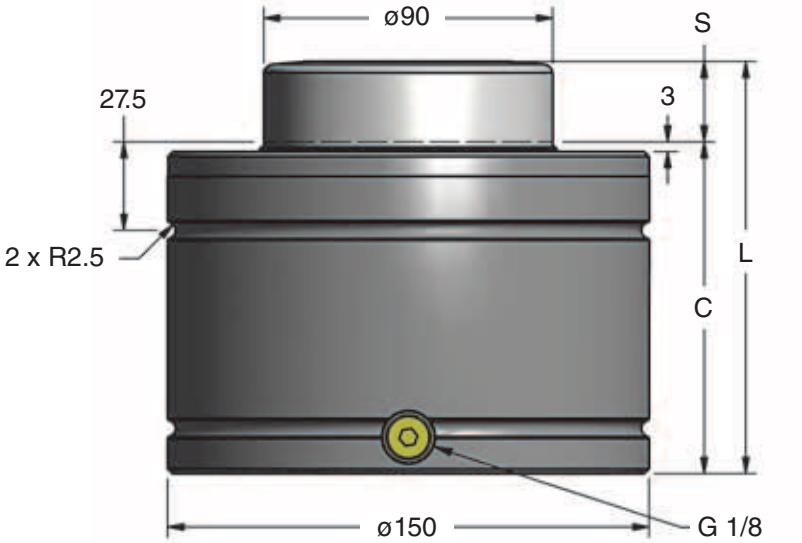

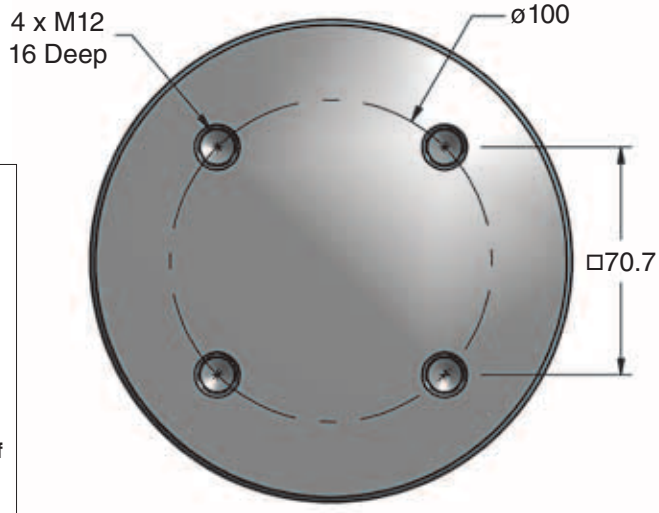

RM - Radius Groove

Force Graph

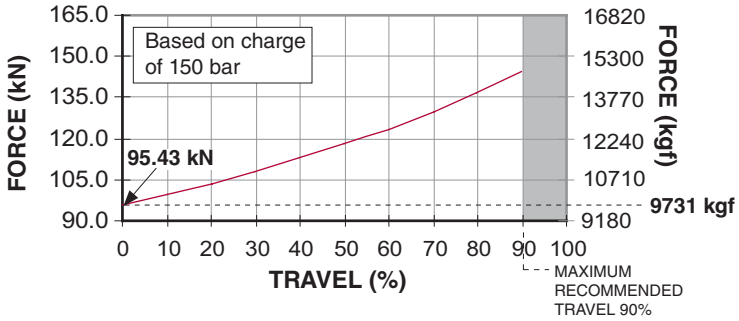

Part No.	S mm	On-Contact Force kN (kgf)	Max Force* kN (kgf)	C	L ±0.25	Pressure Increase* %	Weight kg
• UT.9600.025	25.0	95.43 (9731)	144.32 (14717)	103.0	128.0	51	10.68
UT.9600.032	32.0			110.0	142.0		11.17
UT.9600.038	37.5			115.5	153.0		11.55
• UT.9600.050	50.0			128.0	178.0		12.42
UT.9600.063	62.5			140.5	203.0		13.29
• UT.9600.075	75.0			153.0	228.0		14.16
UT.9600.080	80.0			158.0	238.0		14.51
• UT.9600.100	100.0			178.0	278.0		15.90
• UT.9600.125	125.0			203.0	328.0		17.64

• *Preferred Sizes*

*Based on maximum recommended travel, 90% stroke

On-Contact Force

bar	MPa	kN	kgf
150	15.0	95.43	9731
125	12.5	79.52	8109
100	10.0	63.62	6487
75	7.5	47.71	4865
50	5.0	31.81	3244
25	2.5	15.90	1622
20	2.0	12.72	1297

1.734.207.1100 • fax 1.734.207.2222 • www.dadco.net
DADCO

UT.9600 - 95 kN / 10.7 ton

Mount Options

B21 **90.21.07500**

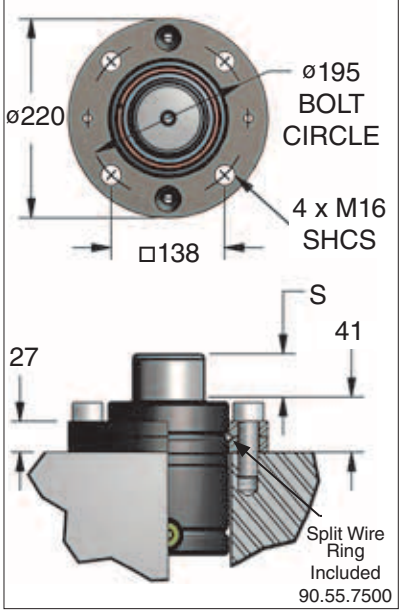

B25 **90.25.07500**

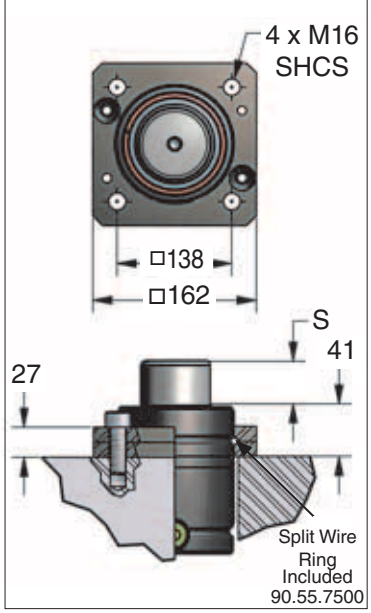

B41 **90.41.9600**

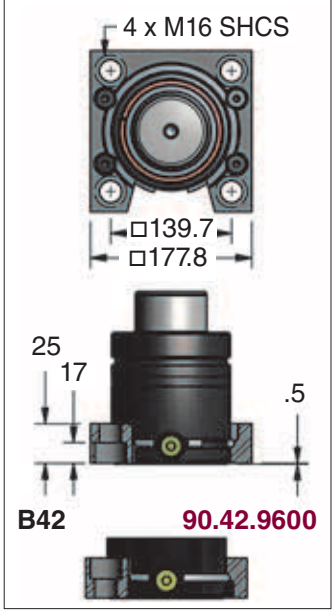

B42 **90.42.9600**

B45 **90.45.9600**

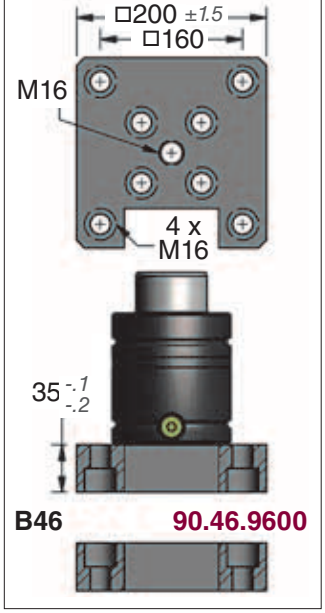

B46 **90.46.9600**

B43 **90.43.9600**

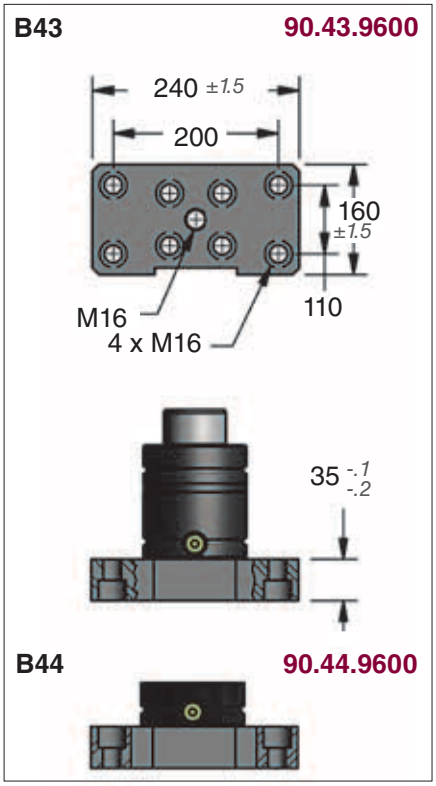

B44 **90.44.9600**

B47 **90.47.9600**

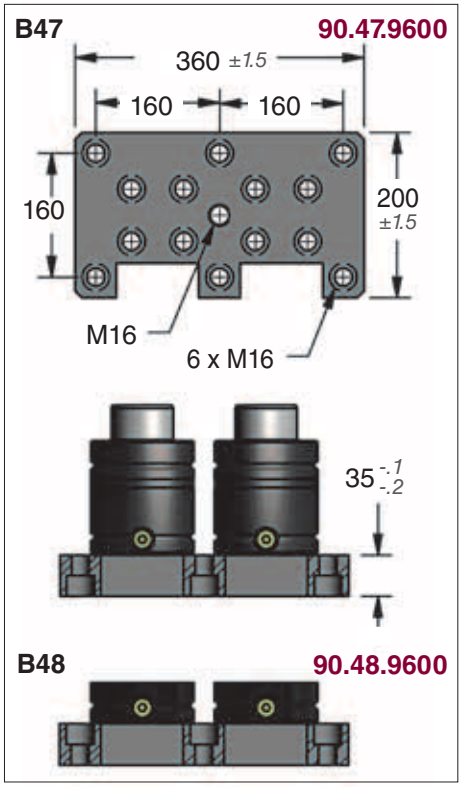

B48 **90.48.9600**

Ordering Example:

Model		Stroke		Mount		Operating System		Charging Pressure (bar)
UT.9600	.	025	.	B21	.	C	.	150
Part Number				RM: Radius Groove		C: Self-contained FB: Open Flow Fitting (90.805.115)		15~150 bar (1.5~15 MPa) When not specified, default is 150 bar (15 MPa).

Linked Operations

Request Linked System Components Catalog for a comprehensive list of components necessary to configure a linked system.

Hose and Hose Assemblies

***MINIFLEX®* 90.705** *(Y-705)* **Hose**
90.705._____
Length (mm)

DADCO's *MINIFLEX®* hose is used to connect gas springs together as a linked system. *MINIFLEX®* hose is able to withstand high pressure and still maintain the flexibility necessary when linking gas springs.

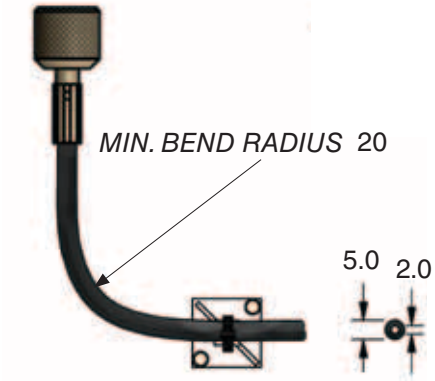

Working Pressure	Burst Pressure
500 bar *(50 MPa)*	1940 bar *(194 MPa)*

Hose Assembly with two 90.804.943 *(B-943)* Hose Adapters 90.705.B943.B943.___.I L	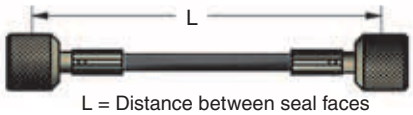 L = Distance between seal faces
Hose Assembly with one 90.804.943 *(B-943)* Hose Adapter and one 90.804.959 *(B-959)* Hose Adapter 90.705.B943.B959.___.I L	 L = Distance between seal faces
Hose Assembly with two 90.804.959 *(B-959)* Hose Adapters 90.705.B959.B959.___.C L	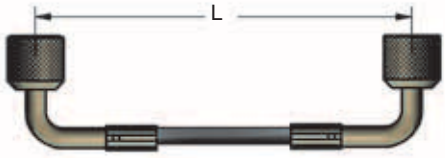 L = Distance between seal faces
Hose Assembly with two 90.804.959 *(B-959)* Hose Adapters 90.705.B959.B959.___.S L	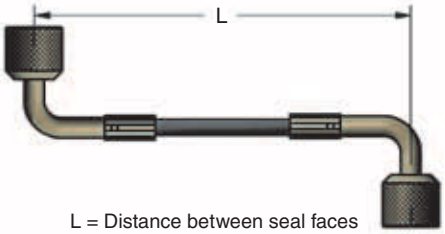 L = Distance between seal faces

Hose and Port Adapters: Zip (CNOMO)

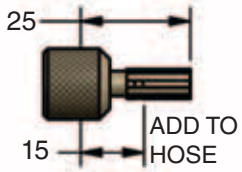

90.804.943 *(B-943)*
Straight Swivel

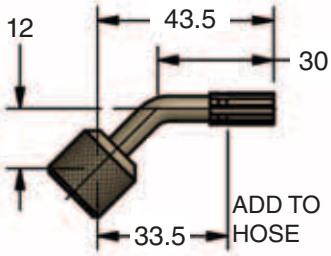

90.804.954 *(B-954)*
45° Swivel

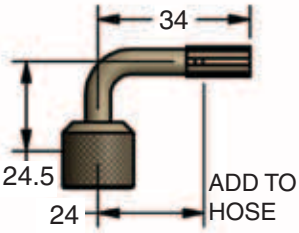

90.804.959 *(B-959)*
90° Swivel

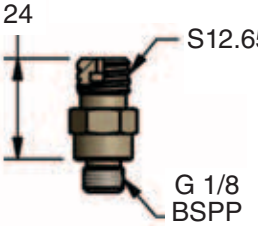

90.805.115 *(B-115)*
Port Adapter

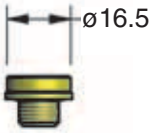

90.505.110
(G-109)
Flush Plug

Distribution Block

90.412.07 / 90.412.09 / 90.412.10 / 90.412.12

The distribution block is used with a control panel to simplify piping to multiple cylinders.

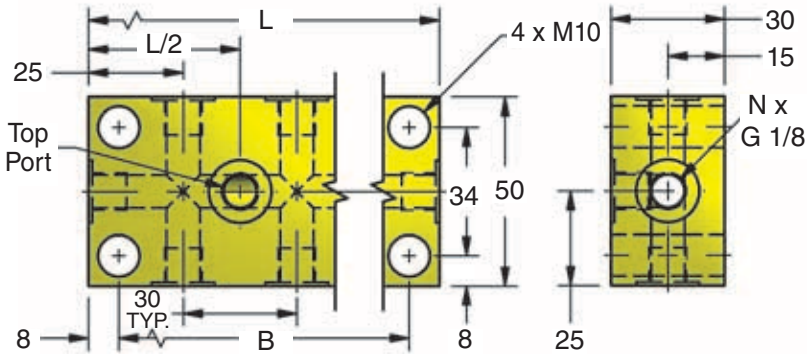

Model	N (Total Ports)	End Ports	Top Port	Side Ports	L	B
90.412.07	7	2	1	4	80	64
90.412.09	9	2	1	6	110	94
90.412.10	10	2	-	8	140	124
90.412.12	12	2	-	10	170	154

1.734.207.1100 • fax 1.734.207.2222 • www.dadco.net
DADCO®

Linked Operations

Common Control Panel
90.416.A2B

The DADCO Common Control Panel is used to fill, drain, and monitor the pressure of linked DADCO Nitrogen Gas Springs from outside the die. The panel consists of a high pressure gauge (MPa and bar), quick disconnect fill valve, and a rupture disk to prevent overpressurization.

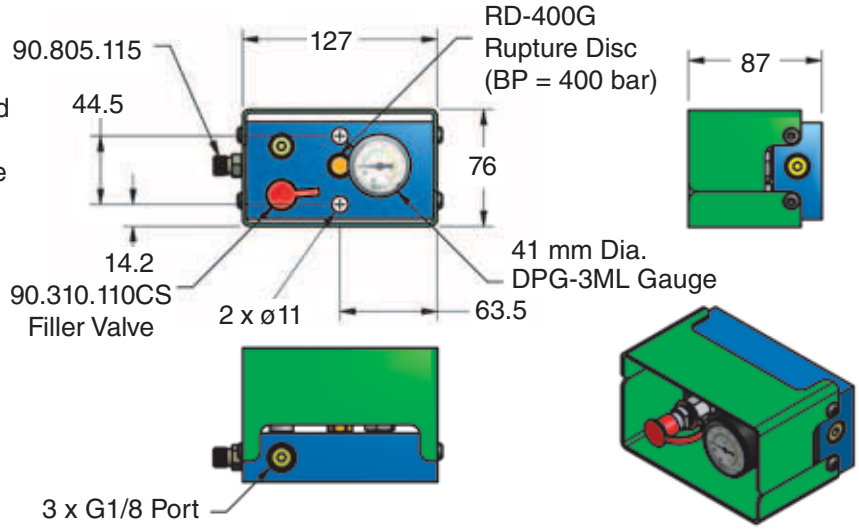

Control Panel with Pressure Monitor
90.406.421

The DADCO Control Panel with Pressure Monitor is used to maintain the pressure of linked DADCO Nitrogen Gas Springs from outside the die. This panel includes a digital pressure sensor with programmable output to signal the press to stop running if pressure drops below a preset level. The control panel is outfitted with a high pressure gauge (MPa and bar), quick disconnect fill valve, and a rupture disk to prevent over pressurization. Contact DADCO for more information.

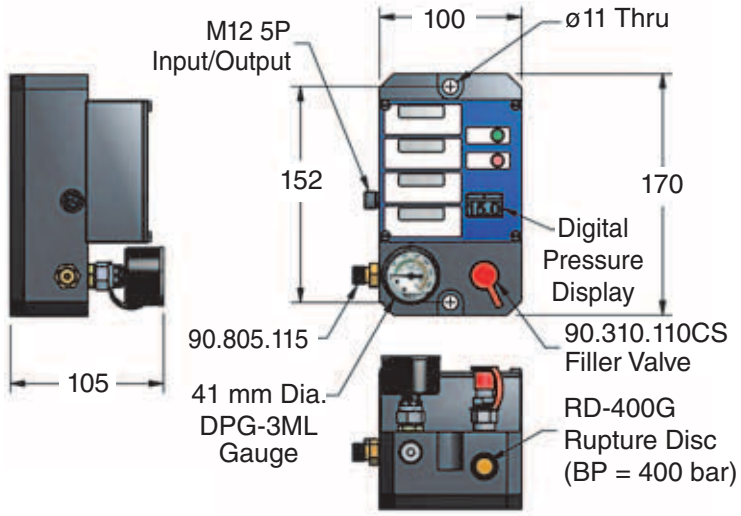

Pressure Indicator
90.243.___ (08 = 80 MPa, 10 = 100 MPa)

DADCO offers an optional pressure indicator for the UT.1000 and UT.2600 self-contained models. This indicator is preset and installed in a special G 1/8 port to designate that the gas spring pressure is above the preset value. The charging pressure must be a minimum of 20 bar/2 MPa above the preset value when the indicator is installed; refer to ordering example. The pressure indicator requires manual reset upon recharging. The UT.1000 and UT.2600 may be ordered with the port prepped for a pressure indicator to be installed; gas springs will be provided with a port plug (CIP option). Contact DADCO for more information.

Operation Example:

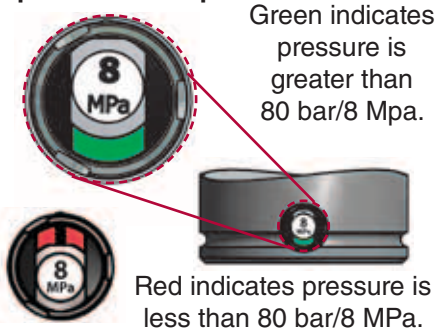

Pressure Indicator Removal Tool
90.243.RT

Use the Pressure Indicator Removal Tool to remove and install the Pressure Indicator.

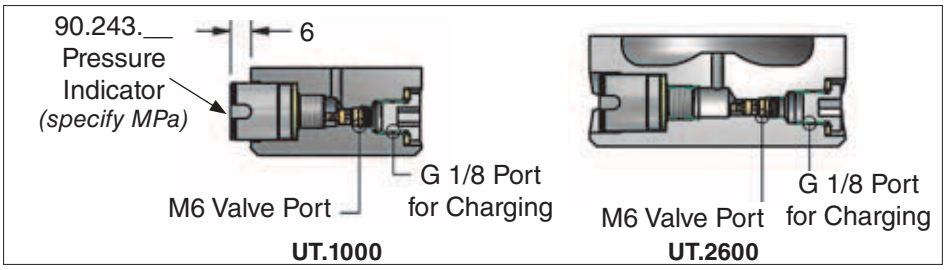

Ordering Example:

Model		Stroke		Mount*		Pressure Indicator		Charging Pressure (bar)
UT.1000	•	025	•	B40F	•	CI08	•	100
Part Number UT.1000 or UT.2600						CI08 = 8 MPa CI10 = 10 MPa CIP = Port only with plug		Must be charged at a minimum of 20 bar/2 MPa above preset pressure indicator value.

Technical Data

CAUTION
DO NOT attempt maintenance on spring until internal pressure is exhausted.

Operating Specifications

Charging Medium:	Nitrogen Gas	Operating Temperature:	4°C – 71°C
Charging Pressure:	15 – 150 bar *(1.5 – 15 MPa)*	Maximum Speed:	1.6 m/sec

Provide Stroke Reserve
- DADCO UT Series gas springs will permit travel of the full nominal stroke; however, at least a 10% stroke reserve is recommended to achieve optimal performance and safety (F.1 and F.2).

Avoid Side Loading
- A misaligned press or die can cause side loading that increases wear on the bearing, seal, and piston rod (F.4). Therefore, avoid side loading when possible (F.3).

Rod End Thread
- The end of the piston rod has a construction thread intended for assembly and disassembly purposes only, and should never be used to mount or secure the gas spring (F.4). Die vibration and/or misalignment will damage the spring.

Protect From Fluids
- Direct contact with certain die lubricants and cleaners should be avoided (F.6). Protect gas springs by providing adequate drainage in gas spring pockets (F.5).

Discharging Self-Contained Gas Spring
- The DADCO Pressure Analyzer *(90.315.5)* allows for charging, discharging and gauging of the pressure in the gas springs (F.7).

Recharging Self-Contained Gas Spring
- Hold the spring vertically at all times during filling. Never compress the gas spring in a vice or clamp outside of the die or application as damage to the gas spring can result (F.8).
- Never fill a gas spring unless the rod is in the fully extended position (F.10). Thread the T-handle *(90.320.2)*, into the rod end and depress the valve stem with the Valve Bleed Tool *(90.360.4)* or Port Servicing Tool *(90.320.8)*. Pull the rod cartridge assembly up until it is seated firmly against the retaining ring (F.9). Remove the T-handle from the rod and charge the gas spring to the desired pressure. Refer to the Maintenance Instructions for complete step-by-step instruction.

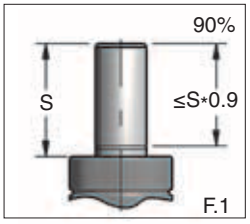

F.1

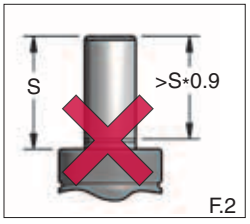

F.2

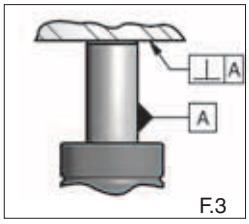

F.3

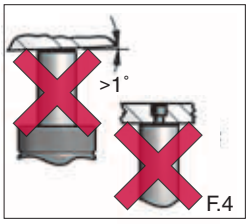

F.4

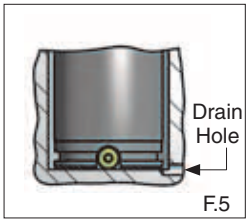

F.5

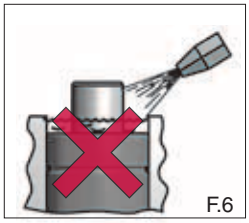
F.6

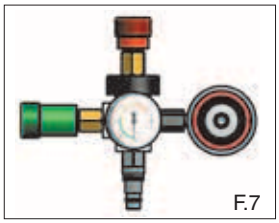
F.7

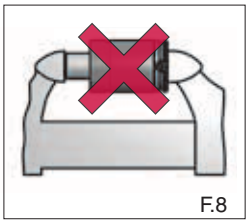
F.8

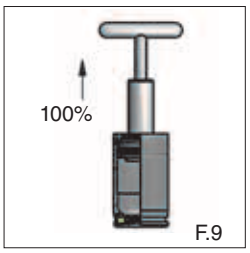

F.9

F.10

Converting from Self-Contained mode to Linked mode

Remove Port Plug (A.1).

Exhausting the Spring
- With the cylinder in the horizontal position, exhaust the gas spring by depressing the valve stem using the appropriate tool (A.2). Keep face and hands clear of the port.
- After all the gas pressure is exhausted, be sure that the piston rod will retract into the tube manually. If not, try depressing the valve stem again. If still unsuccessful **STOP** and contact your DADCO Service Representative.

Remove Valve
- Remove the valve by unscrewing it using the appropriate tool (A.3).

Ready to Pipe
- Install a port adapter into the open G 1/8 port, (A.4). A wide variety of port adapters and fittings are available, contact DADCO for more information.

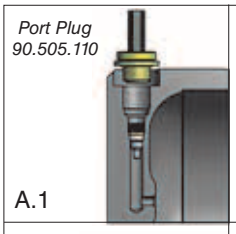

A.1

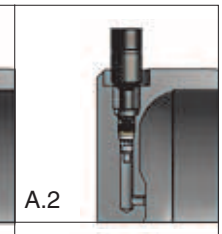
A.2

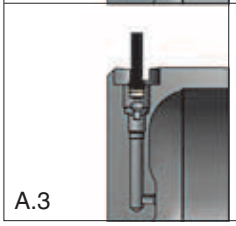
A.3

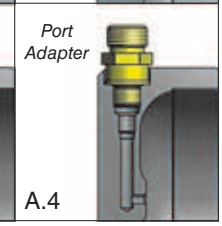

A.4

1.734.207.1100 • fax 1.734.207.2222 • www.dadco.net
DADCO®